Thyristor Modules
AMKT 19

V_{RSM} V	V_{RRM}, V_{DRM} V	I_{TRMS} = 40 A (maximum value for continuous operation) I_{TAV} = 25 A (sin 180; T_C = 60 °C)	
700	600	AMKT 19-06D	
900	800	AMKT 19-08D	
1300	1200	AMKT 19-12E	
1500	1400	AMKT 19-14E	
1700	1600	AMKT 19-16E	

Symbol	Conditions	AMKT 19	Units
I_{TAV}	sin. 180; T_{case} = 60 °C	25	A
	T_{case} = 85 °C	18	A
I_D	B2/B6 | T_{amb} = 45 °C; P 3/180	31	A
	T_{amb} = 35 °C; P 3/180 F	46	A
I_{RMS}	W1/W3 | T_{amb} = 45 °C; P 3/180	42 / 3 x 30	A
I_{TSM}	T_{vj} = 25 °C; 10 ms	320	A
	T_{vj} = 125 °C; 10 ms	280	A
i^2t	T_{vj} = 25 °C; 8,3 ... 10 ms	510	A^2s
	T_{vj} = 125 °C; 8,3 ... 10 ms	390	A^2s
t_{gd}	T_{vj} = 25 °C; I_G = 1 A		
	di_G/dt = 1 A/µs	1	µs
t_{gr}	$V_D = 0{,}67 \cdot V_{DRM}$	1	µs
$(di/dt)_{cr}$	T_{vj} = 125 °C	150	A/µs
t_q	T_{vj} = 125 °C	typ. 80	µs
I_H	T_{vj} = 25 °C; typ./max.	100	mA
I_L	T_{vj} = 25 °C; R_G = 33 Ω; typ./max.	250	mA
V_T	T_{vj} = 25 °C; I_T = 75 A	max. 2,3	V
$V_{T(TO)}$	T_{vj} = 125 °C	1,0	V
r_T	T_{vj} = 125 °C	16	mΩ
I_{DD}; I_{RD}	T_{vj} = 125 °C; $V_{RD} = V_{RRM}$		
	$V_{DD} = V_{DRM}$	max. 10	mA
V_{GT}	T_{vj} = 25 °C; d.c.	3	V
I_{GT}	T_{vj} = 25 °C; d.c.	150	mA
V_{GD}	T_{vj} = 125 °C; d.c.	0,25	V
I_{GD}	T_{vj} = 125 °C; d.c.	5	mA
R_{thjc}	cont. } per thyristor / per module	1,2	°C/W
	sin. 180 } per thyristor / per module	1,3	°C/W
	rec. 120 } per thyristor / per module	1,35	°C/W
R_{thch}	} per thyristor / per module	0,2	°C/W
T_{vj}		– 40 ... + 125	°C
T_{stg}		– 40 ... + 125	°C
V_{isol}	a. c. 50 Hz; r.m.s; 1 s/1 min	3600	V~
M_1	to heatsink } SI (US) units	5 (44 lb. in.) ± 15 %	Nm
M_2	to terminals } SI (US) units	3 (26 lb. in.) ± 15 %	Nm
a		5 · 9,81	m/s^2
w	approx.	95	g

DIMENSIONS

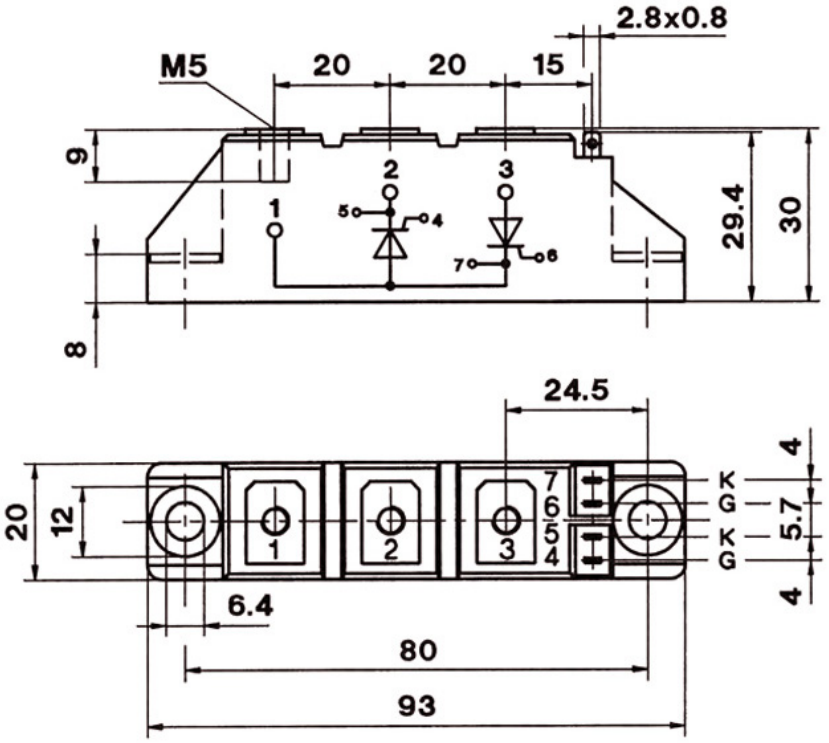

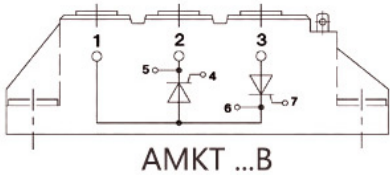

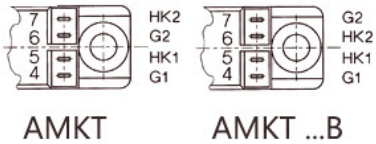

Dimensions in mm
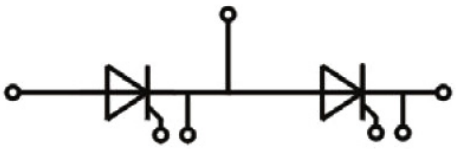
TOPOLOGY OF INTERNAL CONNECTION