DRD1100G22

Rectifier Diode

DS5999-1 March 2011 (LN28185)

FEATURES

- Double Side Cooling
- High Surge Capability

KEY PARAMETERS

V_{RRM}	**2200V**
$I_{F(AV)}$	**1100A**
I_{FSM}	**13900A**

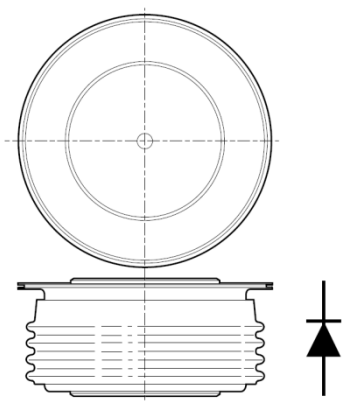

(See Package Details for further information)

Fig. 1 Package outline

VOLTAGE RATINGS

Part and Ordering Number	Repetitive Peak Voltages V_{RRM} V	Conditions
DRD1100G22 DRD1100G20 DRD1100G18 DRD1100G16	2200 2000 1800 1600	$V_{RSM} = V_{RRM}+100V$

ORDERING INFORMATION

When ordering, select the required part number shown in the Voltage Ratings selection table.

For example:

DRD1100G22 for a 2200V device

CURRENT RATINGS

T_{case} = 75°C unless stated otherwise

Symbol	Parameter	Test Conditions	Max.	Units
Double Side Cooled				
$I_{F(AV)}$	Mean forward current	Half wave resistive load	1330	A
$I_{F(RMS)}$	RMS value	-	2090	A
I_F	Continuous (direct) on-state current	-	1880	A

T_{case} = 100°C unless stated otherwise

Symbol	Parameter	Test Conditions	Max.	Units
Double Side Cooled				
$I_{F(AV)}$	Mean forward current	Half wave resistive load	1100	A
$I_{F(RMS)}$	RMS value	-	1720	A
I_F	Continuous (direct) on-state current	-	1560	A

SURGE RATINGS

Symbol	Parameter	Test Conditions	Max.	Units
I_{FSM}	Surge (non-repetitive) on-state current	10ms half sine, T_{case} = 175°C	13.9	kA
I^2t	I^2t for fusing	V_R = 0	0.97	MA^2s

THERMAL AND MECHANICAL RATINGS

Symbol	Parameter	Test Conditions		Min.	Max.	Units
$R_{th(j-c)}$	Thermal resistance – junction to case	Double side cooled	DC	-	0.035	°C/W
$R_{th(c-h)}$	Thermal resistance – case to heatsink	Double side cooled	DC	-	0.008	°C/W
T_{vj}	Virtual junction temperature	Blocking V_{DRM} / $_{VRRM}$		-40	175	°C
T_{stg}	Storage temperature range			-40	175	°C
F_m	Clamping force			12	18	kN

CHARACTERISTICS

Symbol	Parameter	Test Conditions	Min.	Max.	Units
V_{FM}	Forward voltage	At 1500A peak, T_{case} = 25°C	-	1.45	V
I_{RM}	Peak reverse current	At $V_{DRM,}$ T_{case} = 175°C	-	60	mA
Q_S	Total stored charge	I_F = 1000A, dI_{RR}/dt =10A/µs T_{case} = 175°C, V_R =100V	-	2500	µC
V_{TO}	Threshold voltage	At T_{vj} = 175°C	-	0.82	V
r_T	Slope resistance	At T_{vj} = 175°C	-	0.318	mΩ

CURVES

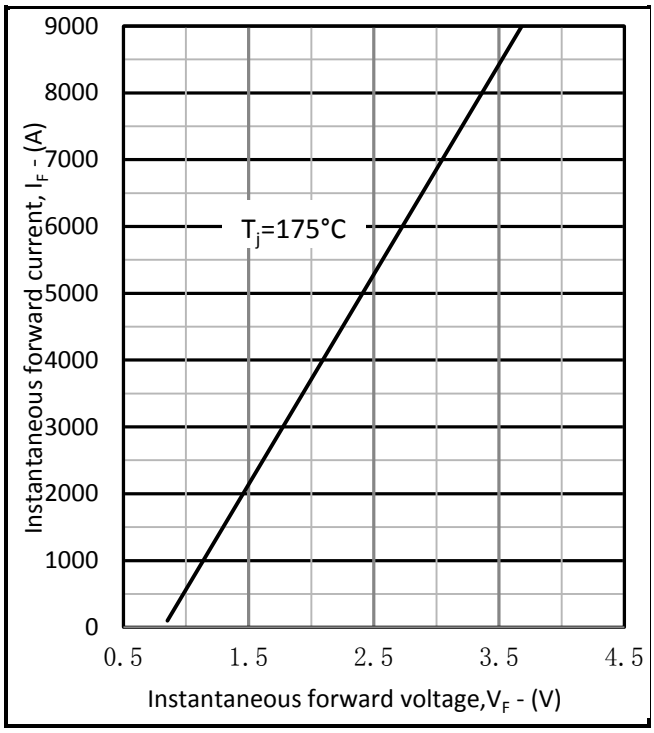

Fig.2 Maximum forward characteristics

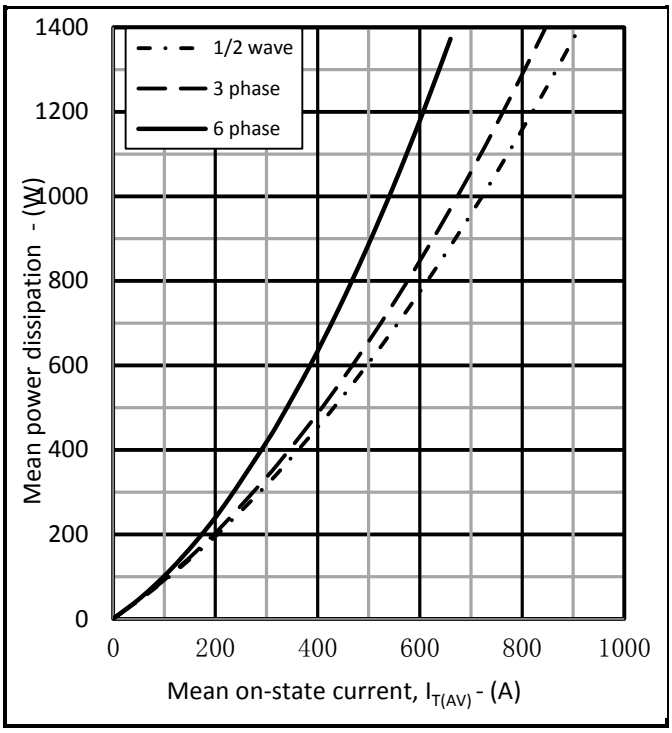

Fig.3 Dissipation curves

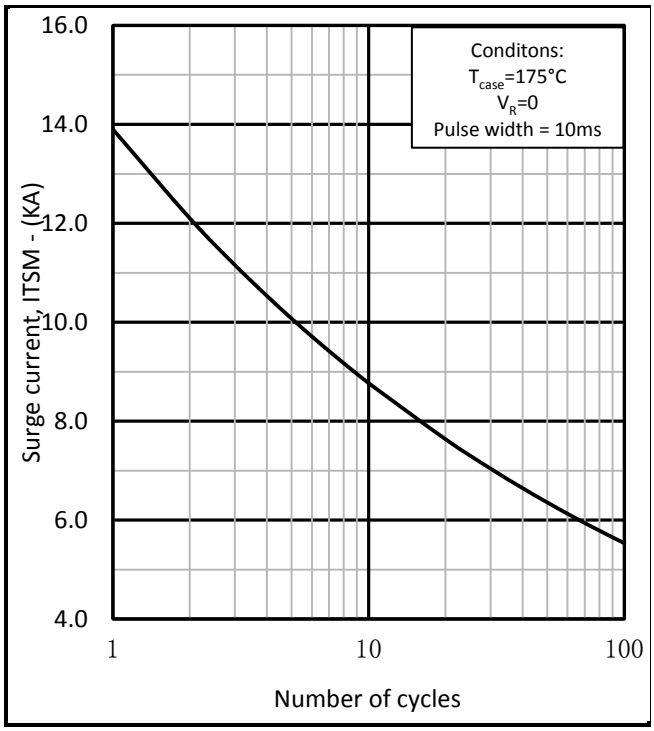

Fig.4 Surge (Non-Repetitive) Forward current vs time

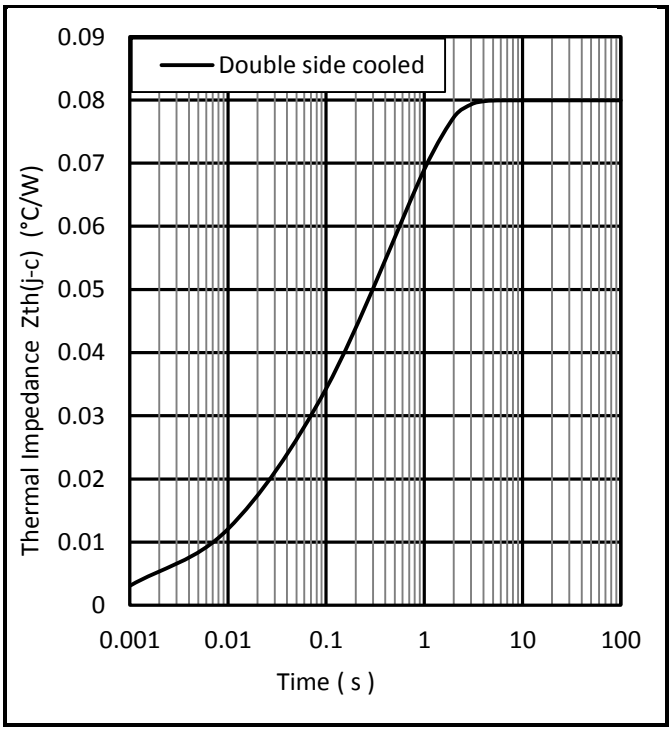

Fig.5 Maximum (limit) transient thermal impedance-junction to case

PACKAGE DETAILS

For further package information, please contact Customer Services. All dimensions in mm, unless stated otherwise. DO NOT SCALE.

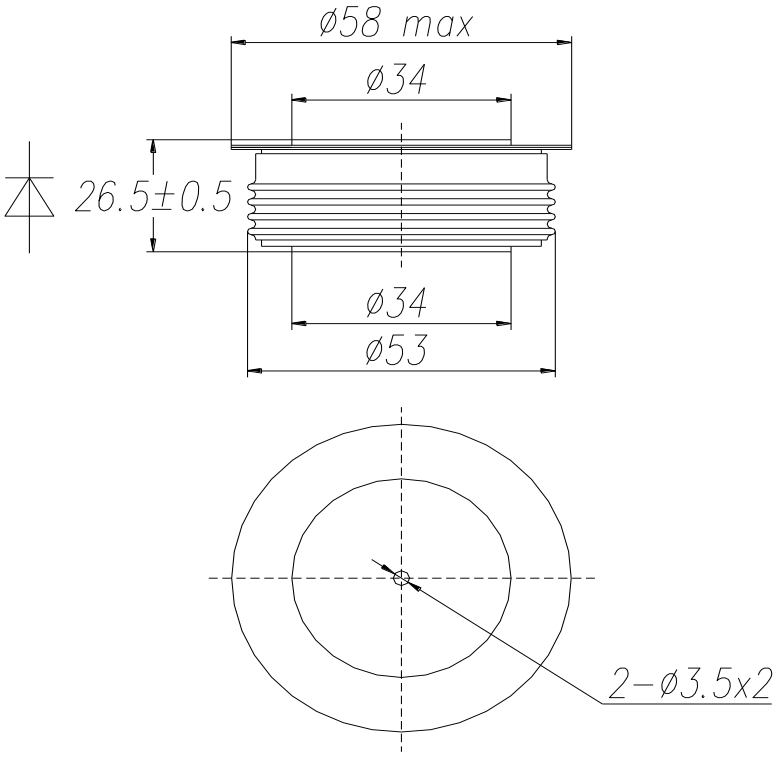

Package outline type code: G

Note:
Some packages may be supplied with gate and or tags.

IMPORTANT INFORMATION:

This publication is provided for information only and not for resale.

The products and information in this publication are intended for use by appropriately trained technical personnel.

Due to the diversity of product applications, the information contained herein is provided as a general guide only and does not constitute any guarantee of suitability for use in a specific application.The user must evaluate the suitability of the product and the completeness of the product data for the application. The user is responsible for product selection and ensuring all safety and any warning requirements are met. Should additional product information be needed please contact Customer Service.

Although we have endeavoured to carefully compile the information in this publication it may contain inaccuracies or typographical errors. The information is provided without any warranty or guarantee of any kind.

This publication is an uncontrolled document and is subject to change without notice. When referring to it please ensure that it is the most up to date version and has not been superseded.

The products are not intended for use in applications where a failure or malfunction may cause loss of life, injury or damage to property. The user must ensure that appropriate safety precautions are taken to prevent or mitigate the consequences of a product failure or malfunction.

The products must not be touched when operating because there is a danger of electrocution or severe burning. Always use protective safety equipment such as appropriate shields for the product and wear safety glasses. Even when disconnected any electric charge remaining in the product must be discharged and allowed to cool before safe handling using protective gloves.

Extended exposure to conditions outside the product ratings may affect reliability leading to premature product failure. Use outside the product ratings is likely to cause permanent damage to the product. In extreme conditions, as with all semiconductors, this may include potentially hazardous rupture, a large current to flow or high voltage arcing, resulting in fire or explosion. Appropriate application design and safety precautions should always be followed to protect persons and property.

Product Status & Product Ordering:
We annotate datasheets in the top right hand corner of the front page, to indicate product status if it is not yet fully approved for production. The annotations are as follows:-

Target Information:	This is the most tentative form of information and represents a very preliminary specification. No actual design work on the product has been started.
Preliminary Information:	The product design is complete and final characterisation for volume production is in progress.The datasheet represents the product as it is now understood but details may change.
No Annotation:	The product has been approved for production and unless otherwise notified by Dynex any product ordered will be supplied to the **current version of the data sheet prevailing at the time of our order acknowledgement.**

All products and materials are sold and services provided subject to Dynex's conditions of sale, which are available on request.

Any brand names and product names used in this publication are trademarks, registered trademarks or trade names of their respective owners.

HEADQUARTERS OPERATIONS

DYNEX SEMICONDUCTOR LIMITED
Doddington Road, Lincoln, Lincolnshire, LN6 3LF
United Kingdom.
Phone: +44 (0) 1522 500500
Web: http://www.dynexsemi.com

CUSTOMER SERVICE

Phone: +44 (0) 1522 502753 / 502901
e-mail: powersolutions@dynexsemi.com

© Dynex Semiconductor Ltd. Technical Documentation – Not for resale.